Data Sheet

Article number: 46932522
Description: Torque limiter Synchron B 25 M

Measures

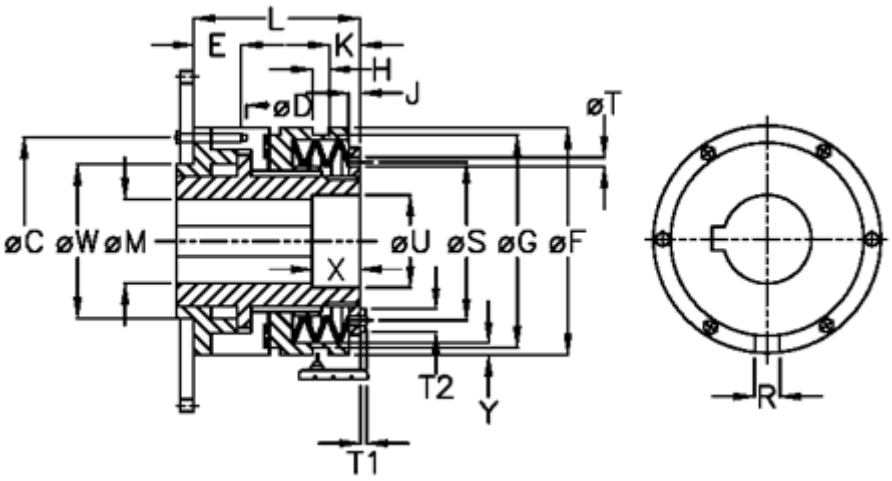

C	= 70	J	= 6.0	T1	= 4.0
D	= 6xM5	K	= 12.0	T2	= 8
Disc spring mounting	= 5x1M	L	= 70.0	U	= 26
Disc spring version	= M - medium	M max	= 25	V	= 10
E	= 8.0	M min	= 10	W	= 50
F	= 82	R	= 6	X	= 20
G	= 73.0	S	= 48	Y	= 2
H	= 9	T	= 5	Z	= 0.0

Product drawings and brochures of any kind may contain errors for which Brd. Klee A/S cannot be liable.